This document is the property of Nian-Yeong Corporation and is delivered on the express condition that it is not to be disclosed, reproduced or used, in whole or in part, for manufacture or sale by anyone other than Nian-Yeong Corporation without its prior consent, and that no right is granted to disclose or to use any information in this document.

CUSTOMER DRAWING

REV.	DESCRIPTION	APPROVED BY	DATE	ECN NO.
A	RELEASE	Fido Weng	16/06/20"	
B				
C				

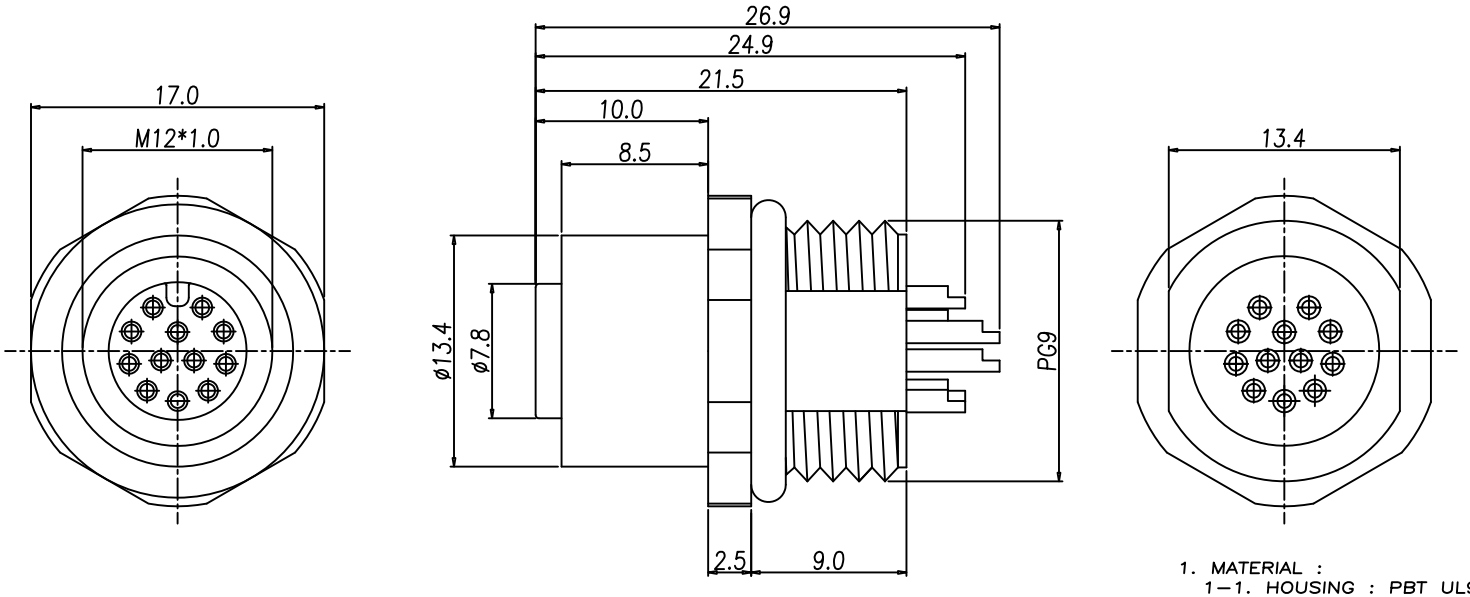

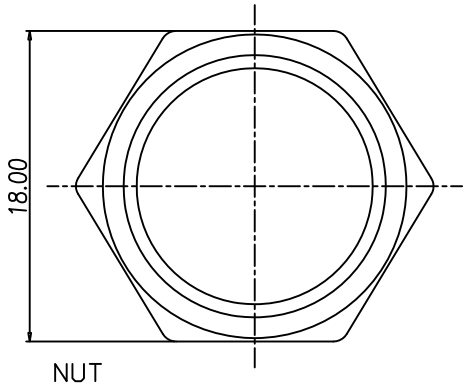

NUT

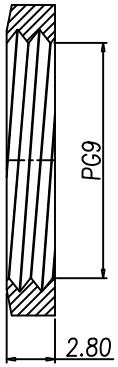

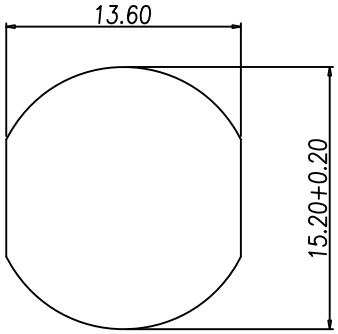

RECOMMENDPANEL CUT-OUT

1. MATERIAL :
   1-1. HOUSING : PBT UL94V-0 ; COLOR : BLACK
   1-2. CONTACT : BRASS
   1-3. SHELL : BRASS
   1-4. NUT : BRASS
   1-5. O-RING A : EPDM ; COLOR : BLACK.
   1-6. O-RING B : EPDM ; COLOR : BLACK.
   1-7. O-RING C : SILICONE ; COLOR : GREEN.
2. FINISH :
   2-1. CONTACT : SEE TABLE A
   UNDER PLATE : NICKEL
   2-2. SHELL : NICKEL PLATED.
   2-3. NUT : NICKEL PLATED.
3. ELECTRICAL SPECIFICATION :
   3-1. Rated current : 1.5A
   3-2. Rated Voltage : 30V
   3-3. Water proof : IP67
4. Environmental :
   4-1. Operation Temperature : -40℃~85℃

TABLE A

PART NO	FINISH
WP-12F2-32-11	GOLD FLASH
WP-12F2-33-11	GOLD 10u"

DRAWN	LED	APP'D	Fido Weng	UNIT	mm	TOLERANCE .x ±0.20 .xx ±0.10 .xxx ±0.05 .xxxx ±0.03 ANGULA ±1°	NIAN YEONG ENTERPRISE 年永實業有限公司	TITLE	WP M12 12P (F) 板端後鎖PG9洗雙邊焊線式		SHEET 1/1
CHK'D	Emily Suen			SCALE	1:1			PART NO.	SEE TABLE A	DWG NO. QC9815	VERSION A