This document is the property of Nian-Yeong Corporation and is delivered on the express condition that it is not to be disclosed, reproduced or used, in whole or in part, for manufacture or sale by anyone other than Nian-Yeong Corporation without its prior consent, and that no right is granted to disclose or to use any information in this document.

CUSTOMER DRAWING

REV.	DESCRIPTION	APPROVED BY	DATE	ECN NO.
A	RELEASE	Yeh Chou	2017/09/07	
B	增加剖視圖 & 修正墊圈材質與電度規格	Ku Chou	02/05/18'	
C				

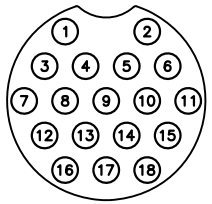

PIN CONFIGURATION

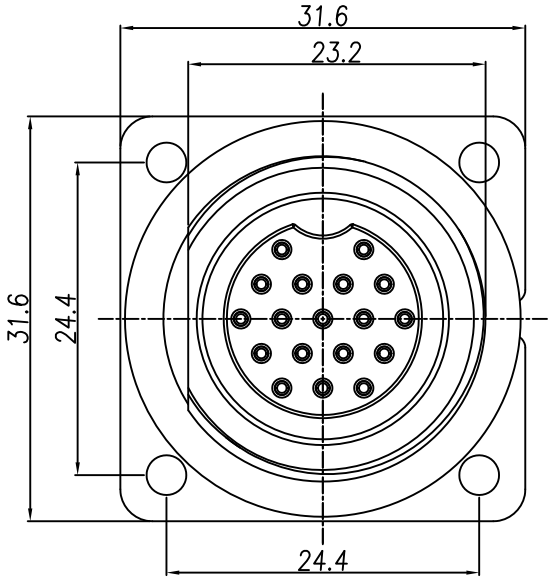

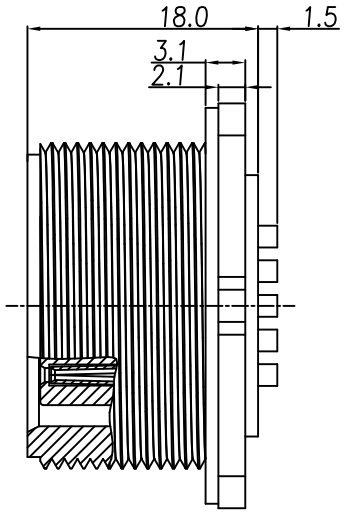

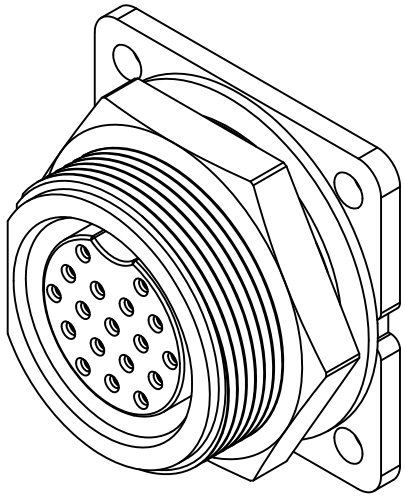

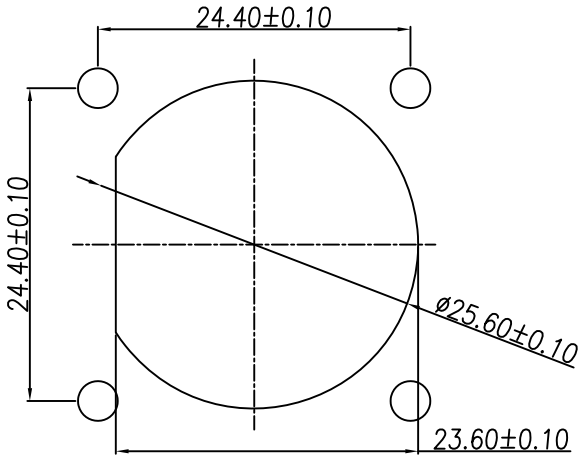

RECOMMEND PANEL HOLE

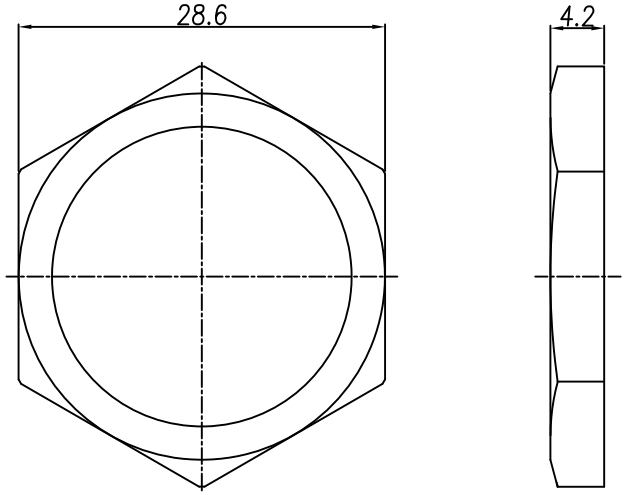

Hex Nut

1. MATERIAL :
   1-1. HOUSING : PA66 UL94V-0 ; COLOR : BLACK
   1-2. CONTACT : BRASS
   B 1-3. GASKET : SILICONE
   1-4. HEX NUT : PA66 UL94V-0 ; COLOR : BLACK
2. FINISH :
   B 2-1. CONTACT : GOLD FLASH PLATED
3. ELECTRICAL SPECIFICATION :
   3-1. RATED CURRENT: 5A
   3-2. RATED VOLTAGE : 300V
   3-3. WATER PROOF: IP67
4. ENVIRONMENTAL :
   4-1. OPERATION TEMPERATURE : -40℃~105℃

DRAWN	Yeh Chou	APP'D	KU Chou	UNIT	MM	TOLERANCE .x ±0.20 .xx ±0.10 .xxx ±0.05 .xxxx ±0.03 ANGULA ±1°	NIAN YEONG ENTERPRISE 年永實業有限公司	TITLE	D SIZE 18P (F) 螺牙平口焊線式 (方型檔板)	SHEET 1/1
CHK'D	KU Chou			SCALE	1:1			PART NO.	WP-18F2-11-11	DWG NO. QC7897	VERSION B